# Engineering Physics 2022-23
## Unit III – Wave Optics

**Syllabus**

Interference in thin films, condition of optical path difference for reflected light, Interference in Wedge shape thin film, fringe width, wedge angle, Newton's rings and its application, Anti-reflection coating, advanced applications of interference in thin film.

---

## Interference

When two or more waves arrive at a point simultaneously, the resultant displacement of that point is equal to the vector sum of the displacement due to each wave separately.

(i) If the two waves arrive at a point in same phase their displacement add to each other the point appears to be bright. This is called as **constructive interference** and the condition of constructive interference is

$$\text{Path difference} \quad \Delta = n\lambda \qquad \text{Where } n = 1, 2, 3 \ldots\ldots\ldots \text{ etc}$$

(ii) If the two waves arrive at a point in opposite phase their displacement cancels each other and the point appears to be dark. This is called as **destructive interference** and the condition of destructive interference is

$$\text{Path difference } \Delta = (2n+1)\frac{\lambda}{2} \qquad \text{Where } n = 0, 1, 2, 3 \ldots\ldots\ldots \text{ etc}$$

## Interference of light is produced in two ways

**(i) Division of Wave front**

When a light from source is allowed to pass through two different slits, the original wave front gets partitioned into two different wave fronts. These wave front when brought together produce interference

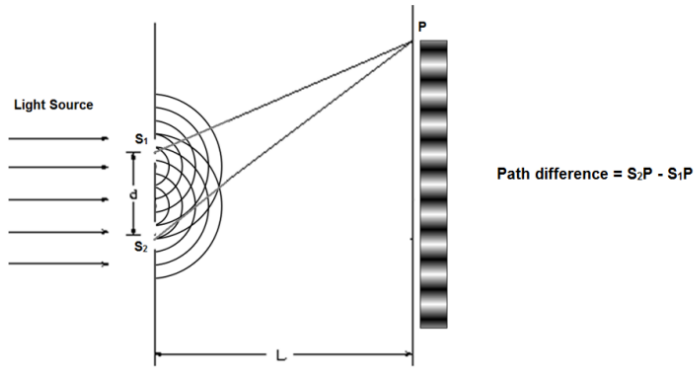


**(ii) Division of Amplitude**

The light beam gets divided into two beams by means of partial reflection and transmission at the surface of a thin transparent film. The amplitude and hence intensity of the beam gets divided. These beams when brought together produce interference.

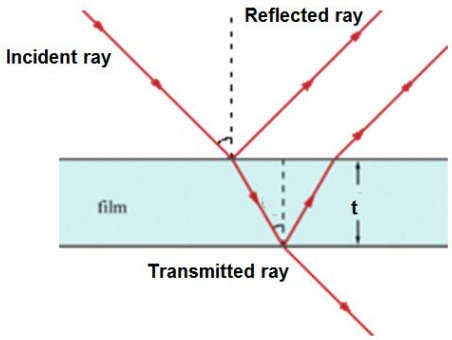

**Thin Film**

A thin optically transparent film of very small thickness of about the order of wavelength of light is called as thin film. Soap bubble, oil layer on surface of water is examples of thin film.

**Interference in Thin Parallel film by Reflected rays**

In thin film the interference is due to the superposition of the Reflected rays from the top surface and the Transmitted ray from the bottom surface of the film.

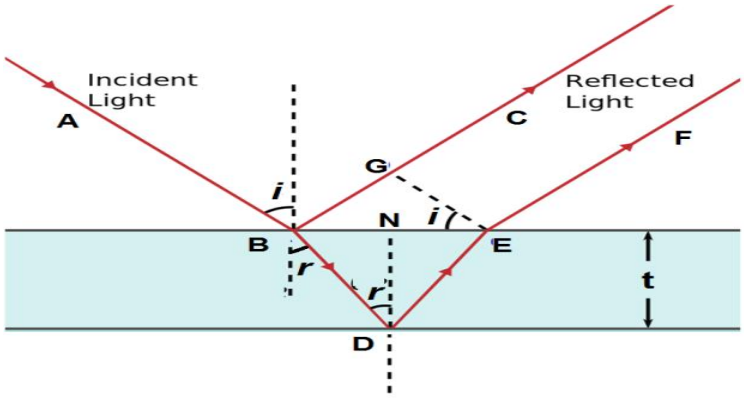


Consider a transparent thin film of thickness, 't' and the refractive index of the material of the film is μ.

Let a ray of light AB is incident on top surface of thin film at an angle 'i'. It is partially reflected along BC and partially refracted along BD. The angle of refraction is 'r'. The refracted ray BD is again partially reflected from the lower surface of the film along DE and emerges out of the film along EF. Draw EG perpendicular to BC. From G and E onwards the rays BC and EF travels equal path and can produce interference.

Therefore the optical path difference between the reflected rays BC and EF is

Optical path difference $\Delta = \mu\,(BD + DE) - BG$

In triangle Δ BDN $\cos r = \frac{DN}{BD}$

Or $BD = \frac{DN}{\cos r} = \frac{t}{\cos r}$ Where DN = t is the thickness of film

But BD = DE Therefore $BD + DE = \frac{2\,t}{\cos r}$

In triangle Δ BEG $\sin i = \frac{BG}{BE}$

Therefore $BG = BE \sin i = (BN + NE) \sin i$

Now again from triangle Δ BDN $\tan r = \frac{BN}{DN} = \frac{BN}{t}$

Or $BN = t \tan r$

But $BN = NE = t \tan r$

Therefore $BG = (t \tan r + t \tan r) \sin i$

Or $BG = 2\,t \tan r \sin i$

But from Snell's Law $\mu = \frac{\sin i}{\sin r}$ therefore $\sin i = \mu \sin r$

Therefore $BG = 2\,t \tan r\,(\mu \sin r)$

Or $BG = 2\,\mu\,t \tan r \sin r$

Therefore Optical path difference $\Delta = \mu\,(BD + DE) - BG$ will be

Optical path difference $\Delta = 2\,\mu\,\frac{2\,t}{\cos r} - 2\,\mu\,t \tan r \sin r$

Or $\Delta = \frac{2\,\mu\,t}{\cos r} - 2\,\mu\,t\,\frac{sinr}{\cos r}\sin r$

Or $\Delta = \frac{2\,\mu\,t}{\cos r}\,(1 - \sin^2 r)$

Or $\Delta = \frac{2\,\mu\,t}{\cos r}\,(\cos^2 r)$

Or Optical path difference $\Delta = 2\,\mu\,t\cos r$

But this path difference is not a true path difference. The ray BC is reflected from the denser medium and hence a phase difference of $\pi$ or a path difference of $\frac{\lambda}{2}$ is introduced in it. Thus the true Optical path difference is between the reflected rays BC and EF will be

Optical path difference $\Delta = 2\,\mu\,t\cos r - \frac{\lambda}{2}$

**Condition for Constructive Interference (Maxima)**

$$2\,\mu\,t\cos r - \frac{\lambda}{2} = n\,\lambda$$

Or $2\,\mu\,t\cos r = n\,\lambda + \frac{\lambda}{2}$

Or $2\,\mu\,t\cos r = (2n + 1)\frac{\lambda}{2}$ **bright band**

**Condition for Destructive Interference (Minima)**

$$2\,\mu\,t\cos r - \frac{\lambda}{2} = (2n + 1)\frac{\lambda}{2}$$

Or $2\,\mu\,t\cos r = (2n + 1)\frac{\lambda}{2} + \frac{\lambda}{2}$

Or $2\,\mu\,t\cos r = (n + 1)\,\lambda$

Or $2\,\mu\,t\cos r = n\,\lambda$ **dark band**

## Wedge Shaped Thin Film

*A wedge shaped thin film is a thin film of varying thickness having zero thickness at one end and increasing thickness towards the other end.*

A thin wedge of air film can be formed by two glass slides resting on each other at one end and separated by thin spacer at other end.

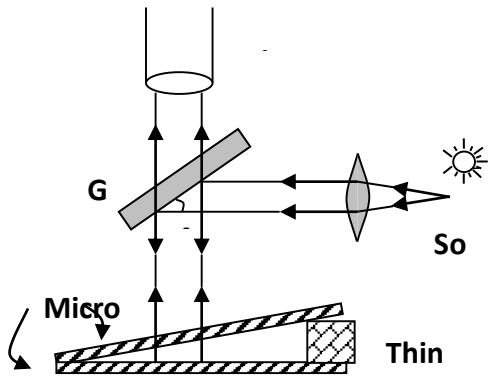


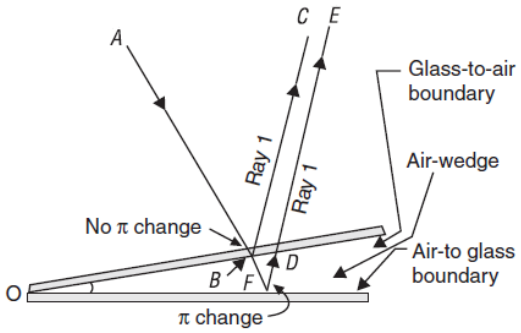


## Fringe Width

Fringe width is the Spacing between two Consecutive Dark Band denoted by $\beta$

**Expression for Fringe Width β in a wedge shaped thin film**

The optical path difference between the two interfering rays reflected from a top and bottom of a wedge shaped thin film is given by $\Delta = 2\mu t \cos r - \frac{\lambda}{2}$ …… (1)

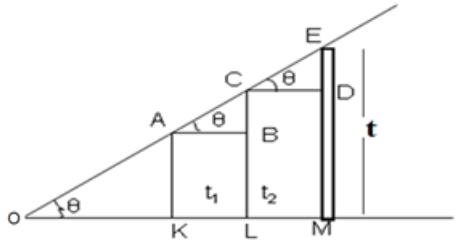


The condition for obtaining a dark band is $2\mu t \cos r = n\lambda$

If the incident light is normal to the air wedge film then r = 0 and $\cos r = 1$

Therefore $2\mu t = n\lambda$

Let a dark band occurs at A and thickness of the wedge at A be $t_1$ than

$$2\mu t_1 = n\lambda \quad \text{…….. (1)}$$

Let the next dark band occurs at C and thickness of wedge at C is $t_2$ than

$$2\mu t_2 = (n+1)\lambda \quad \text{…….. (2)}$$

Subtracting Equation (2) from equation (1), we get

$$2\mu(t_2 - t_1) = \lambda \quad \text{……. (3)}$$

In Δ ABC, Since, θ is very small ∠A = θ and BC $=(t_2 - t_1)$,

and AB = $\beta$ is the distance between successive dark fringe (fringe width)

Therefore from equation (3) we can write

$$2\mu(BC) = \lambda \quad \text{…….. (4)}$$

Again In Δ ABC, $\tan\theta = \frac{BC}{AB}$

Or BC = AB $\tan\theta$

Or BC = $\beta \tan\theta$ ……. (5)

Using Equation (5) in equation (4)

$$2\mu(\beta \tan\theta) = \lambda$$

or $\beta = \frac{\lambda}{2\mu \tan\theta}$

Since $\theta$ is very small, $\tan\theta \approx \theta$

Therefore $\beta = \frac{\lambda}{2\mu\theta}$

From the above equation it is clear that $\beta$ depends upon $\lambda$, $\mu$ *and* $\theta$ which are constant hence $\beta$ is constant for a given wedge angle $\theta$

**(1) Equidistant Fringes:** $\beta$ depends upon $\lambda$, $\mu$ *and* $\theta$ which are constant that is, $\beta$ is constant for a given wedge angle $\theta$. It means that the interference fringes are equidistant from one another.

**(2) Fringe at the contact Edge is always Dark:** At the point of contact of the edge of an air wedge the thickness is zero t = 0. Therefore the optical path difference at the point of contact is given by

$$\Delta = 2\mu t - \frac{\lambda}{2}$$

Since t = 0 $\Delta = -\frac{\lambda}{2}$

This is the condition of destructive interference hence the Fringe at the contact Edge is always Dark

**(3) The interference fringes in this case are straight and parallel**

At the contact edge of two flat surfaces, every point is at the same thickness of film. So, collection of all such points in the wedge shaped thin film where the thickness of the film is constant, takes the shape of a straight line. Therefore interference fringes are straight, parallel and equidistant.

**(4) Fringes of Equal thickness**

Each fringe in the pattern is produced by the interference of rays reflected from sections of the wedge having the same thickness. As each bright fringe or dark fringe is a locus of constant film thickness, the fringes are known as fringes of equal thickness.

**<u>Expression for wedge angle $\theta$ in a wedge shaped thin film</u>**

The optical path difference between the two interfering rays reflected from a top and bottom of a wedge shaped thin film is given by $\Delta = 2\mu t \cos r - \frac{\lambda}{2}$ …… (1)

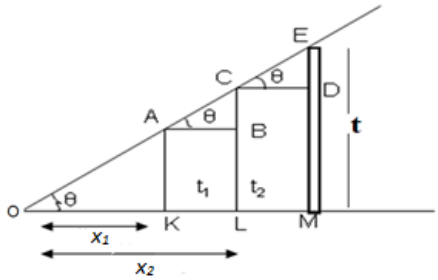


The condition for obtaining a dark band is $2\mu t \cos r = n\lambda$

If the incident light is normal to the air wedge film then r = 0 and $\cos r = 1$

Therefore $2\mu t = n\lambda$

Let us consider the position of dark fringes at two distant point A and C, at a distance of $x_1$ and $x_2$ respectively from the contact edge of air wedge

And let thickness of the wedge at A and C be $t_1$ and $t_2$,

Then for dark fringe at A

$$2\mu t_1 = n\lambda$$

But $t_1 = x_1 \tan\theta = x_1\theta$ (Since $\theta$ is very small, $\tan\theta \approx \theta$)

Therefore $2\mu x_1\theta = n\lambda$ …….. (1)

Similarly for dark fringe at C $2\mu t_2 = (n+N)\lambda$

Where N is number of dark fringes between A and C

And $t_2 = x_2 \tan\theta = x_2\theta$ (Since $\theta$ is very small, $\tan\theta \approx \theta$)

Therefore $2\mu x_2\theta = (n+N)\lambda$ …….. (2)

Subtracting Equation (2) from equation (1), we get

$$2\mu(x_2 - x_1)\theta = N\lambda \quad \text{……. (3)}$$

or $$\theta = \frac{\lambda}{2\mu(x_2 - x_1)}$$

Spacer thickness

The thickness, 't' of the spacer used to form the air wedge can be determined by above formula

$$t = l\tan\theta \approx l\theta$$ (Since $\theta$ is very small, $\tan\theta \approx \theta$)

## Newton's Ring

When a Plano-Convex lens of large radius of curvature is placed on a Plane Glass plate an air film is formed between them. At the point of contact where the lens touches the glass plate the thickness of the air film is zero and when moved outwards, the thickness of the film increases. If a monochromatic light is allowed to fall normally on this film, interference between the reflected rays from the top and bottom surface of the air film takes place and alternate bright and dark concentric circles are formed called as Newton's Ring.

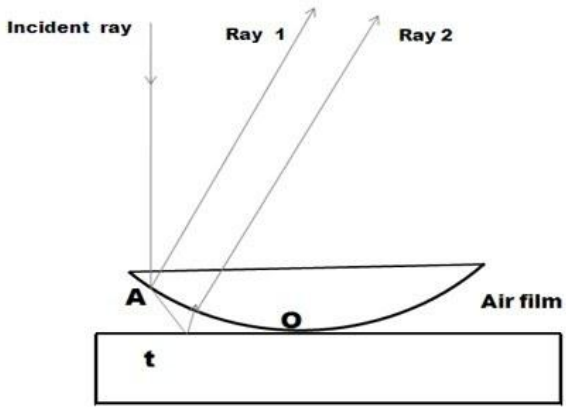

**Condition for Bright and Dark fringe for Newton's ring**

Let AB be a beam of monochromatic light incident normally on the film. Let $R_1$ and $R_2$ are the reflected rays from the top and bottom surface of the film which interfere to produce Newton's Ring and the path difference between these interfering rays is given by

Optical path difference $\Delta = 2\,\mu\, t \cos r - \frac{\lambda}{2}$

Now for air film $\mu = 1$, and If the incident light is normal to the film then $r = 0$

Therefore Optical path difference will be $\Delta = 2t - \frac{\lambda}{2}$

**Condition for Constructive Interference (Bright)**

A **bright band** will be obtained if path difference $= n\lambda$

That is $2t - \frac{\lambda}{2} = n\lambda$

Or $2t = (2n + 1)\frac{\lambda}{2}$ **bright band**

**Condition for Destructive Interference (Dark)**

A **dark band** will be obtained if path difference $= (2n + 1)\frac{\lambda}{2}$

That is $2t - \frac{\lambda}{2} = (2n + 1)\frac{\lambda}{2}$

Or $2t = n\lambda$ **dark band**

**(1) Dark Spot at Center**

Interference pattern has a dark spot at the center which is surrounded by alternately arranged dark and bright rings. Central ring is always dark due to destructive interference of reflected rays. Central ring is formed at the point of contact between Plano-Convex lens and a plane glass plate. At the point of contact thickness 't' of the air wedge is zero.

Optical path difference $\Delta = 2t - \frac{\lambda}{2}$

Or $\Delta = -\frac{\lambda}{2}$ $(\because t = 0)$

Rays having phase difference $180^o$ are out of phase with each other and interference of such two rays will be destructive, forming a dark ring at center.

**(2) Diameter of the Dark and Bright Fringe**

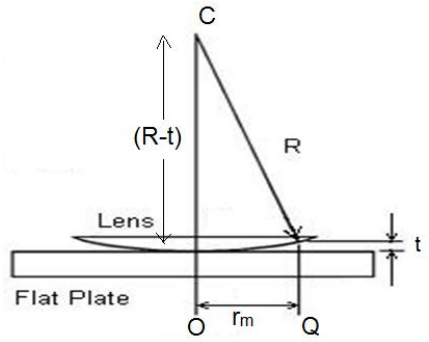


Let a Plano-Convex lens of radius of Curvature R is placed on a Plane Glass plate. Let consider a dark fringe located at point Q. Let the thickness of the film at point Q be t and $r_m$ is the radius of the dark fringe

From the Figure $R^2 = r_m^2 + (R-t)^2$

Or $r_m^2 = R^2 - (R-t)^2$

$r_m^2 = R^2 - R^2 + 2Rt - t^2$

$r_m^2 = 2Rt - t^2$

Since $t \ll R$ Therefore $r_m^2 = 2Rt$

Or $r_m = \sqrt{2Rt}$

**For the Dark Ring:** The condition for the dark ring is $2t = m\lambda$

Therefore radius of the dark ring is $r_m = \sqrt{m\lambda R}$

And the diameter of the Dark Ring is $D_m = 2r_m$

Or $D_m = 2\sqrt{m\lambda R}$

$D_m = \sqrt{m}$

The diameter of the dark ring is proportional to the square root of the natural numbers.

**For the Bright Ring:** The condition for the Bright ring is $2t = (2m+1)\frac{\lambda}{2}$

Therefore radius of the Bright ring is $r_m = \sqrt{(2m+1)\frac{\lambda}{2}R}$

And the diameter of the Bright Ring is $D_m = 2r_m$

Or $D_m = 2\sqrt{(2m+1)\frac{\lambda}{2}R}$

$D_m = \sqrt{(2m+1)}/2$

The diameter of bright ring is proportional to the square root of odd numbers.

**(3) Circular Fringes**

Interference fringes in this experiment are circular in shape and that's why they are called as Newton's Rings. Collection of all the points at which thickness of the film is the same, takes the shape of a circle. So, interference fringes are circular or rings.

**(4) Fringes of Equal thickness**

Each fringe in the pattern is produced by the interference of rays reflected from sections of the wedge having the same thickness. As each bright fringe or dark fringe is a locus of constant film thickness, the fringes are known as fringes of equal thickness.

**(5) Lens of larger radius of Curvature** From the relation $r_m = \sqrt{m\lambda R}$

It is seen that the radius of a dark ring is proportional to square root of the radius of curvature of the lens. $r_m \propto \sqrt{R}$ It implies that the greater the radius of curvature of the lens, the larger would be the diameter of the rings.

**(6) Rings get closer away from the center**

It is observed that two consecutive fringes away from center are closer to each other and hence crowded. The diameter of the dark ring is proportional to the square root of the natural numbers. While the diameter of bright ring is proportional to the square root of the odd numbers. From the equation $D_m = 2\sqrt{m\lambda R}$ it is observed that the order of the rings increases (m increases), the diameter does not increases in same proportion with the result that rings gets closer away from the center.

**<u>Determination of wavelength of light or Radius of curvature of lens by Newton's Ring Method</u>**

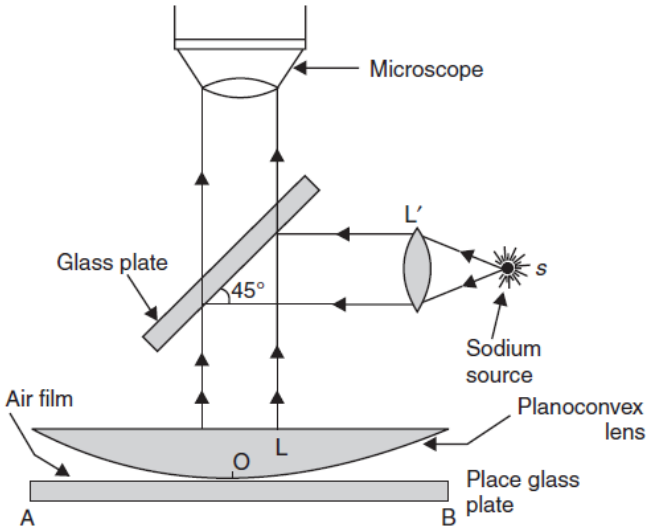


**Experimental assembly consists of**

i) A monochromatic source (S) of light (sodium lamp).
ii) A collimator lens to make the light rays parallel.
iii) A plane glass plate kept at 45° with respect to incident ray.
iv) An assembly of a Plano-Convex lens placed on a Plane Glass plate.
v) The rings are seen through a Microscope.

As shown in fig. S is source of monochromatic rays. In order to make rays parallel, a lens is used. These parallel rays are made to fall on a plane glass plate which is kept at an angle of 45° with respect to incident rays. This glass plate reflects the rays in downward direction, so, the rays are incident on the thin film at an angle of 90°. A thin film of air is formed between the gap of a Plano-Convex lens and a plane glass plate which are kept in contact with each other. The shape of gap is the air wedge. Newton's Rings are formed as a result of interference between the reflected rays from the top and bottom of the faces of the air wedge.

And the true Optical path difference between the interfering rays is

Optical path difference $\Delta = 2\,\mu\, t \cos r - \frac{\lambda}{2}$

Now for air film $\mu = 1$, and If the incident light is normal to the film then $r = 0$

Therefore Optical path difference will be $\Delta = 2t - \frac{\lambda}{2}$

And the diameter of the $m^{th}$ Dark Ring is $D_m = 2\sqrt{m\,\lambda R}$

Or $D_m^2 = 4\,m\,\lambda R$ ……(1)

And diameter of the $(m + p)^{th}$ Dark Ring is $D_{m+p} = 2\sqrt{(m+p)\,\lambda R}$

Or $D_{m+p}^2 = 4\,(m+p)\,\lambda R$ ……..(2)

Subtracting (1) and (2)

$$D_{m+p}^2 - D_m^2 = 4\,p\,\lambda R$$

Or $$\lambda = \frac{D_{m+p}^2 - D_m^2}{4\,p\,R}$$

Alternately if wavelength is known we can find R

$$R = \frac{D_{m+p}^2 - D_m^2}{4\,p\,\lambda}$$

**<u>Determination of Refractive Index of liquid by Newton's Ring Method</u>**

The liquid whose refractive index is to be determined is filled in the gap between the lens and plane glass plate. When the air film is substituted by the liquid film, the condition for interference may then be written as

Optical path difference $\Delta = 2\,\mu\, t \cos (r+\theta) - \lambda/2$

Now for liquid film of refractive index $\mu$, If the incident light is normal to the film then $r = 0$
and again if wedge angle $\theta$ is very small i.e. $\theta \approx 0$, Then $\cos (r + \theta) \approx 1$

Therefore Optical path difference will be $\Delta = 2\mu t - \frac{\lambda}{2}$

And the diameter of the $m^{th}$ Dark Ring is $D_m = \frac{2\sqrt{m\,\lambda R}}{\mu}$

Or $D_m^2 = \frac{4\,m\,\lambda R}{\mu}$ ……(1)

And diameter of the $(m + p)^{th}$ Dark Ring is $D_{m+p} = \frac{2\sqrt{(m+p)\,\lambda R}}{\mu}$

Or $D_{m+p}^2 = \frac{4(m+p)\,\lambda R}{\mu}$ ……..(2)

Subtracting (1) and (2)

$$\left[D_{m+p}^2 - D_m^2\right]_{liquid} = \frac{4p\,\lambda R}{\mu} \quad \text{……(3)}$$

But for air we know that $$\left[D_{m+p}^2 - D_m^2\right]_{air} = 4\,p\,\lambda R \quad \text{……(4)}$$

Therefore from (3) and (4) $$\frac{\left[D_{m+p}^2 - D_m^2\right]_{air}}{\left[D_{m+p}^2 - D_m^2\right]_{liquid}} = \mu$$

## Anti-Reflection coatings (AR)

Antireflection (AR) coatings are thin transparent coatings of optical thickness of one–quarter wavelength given on a surface in order to suppress reflections from the surface

A thin film can act as an AR coating if it meets the following two conditions:

**(i) Phase condition**: The waves reflected from the top and bottom surfaces of the thin film are in opposite phase (out of phase by 180°) such that their overlapping leads to destructive interference,

**(ii) Amplitude condition**: The reflected waves have equal amplitudes.
The reflected wave will have equal amplitude if the refractive index of coating material is nearly equal to the square root of the refractive index of the substrate material, thus

$$\mu_{film} = \sqrt{\mu_{substrate}}$$

## To determine the minimum thickness of the anti-reflection coating thin film

From the above two condition we can determine the required thickness of the film and the refractive index of the material to be used for forming the film.

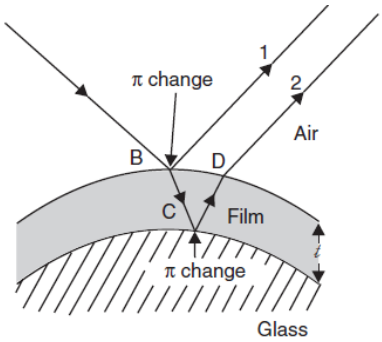


Let the thickness of the Anti-reflection coating film be *t* and the refractive index of the coating film be $\mu_f$. The phase change condition requires that the ray 1 and ray 2 reflected from the top and bottom surfaces of thin film be 180° out of phase. It requires that the optical path difference between the two reflected rays must be equal to odd number of half-waves. The optical path difference between the two reflected rays is

$$\Delta = 2\,\mu_f\, t \cos r - \frac{\lambda}{2} - \frac{\lambda}{2}$$

The first $\frac{\lambda}{2}$ corresponds to the phase change at the top surface of the film (air-to-film boundary) and the second $\frac{\lambda}{2}$ corresponds to the phase change that occurs at the film-to glass boundary because $\mu_f < \mu_{sub}$

Or $$\Delta = 2\,\mu_f\, t \cos r - \lambda = 2\,\mu_f\, t \cos r$$

Because an addition of a full wave or subtraction of a full wave from a train of waves does not affect the original phase relation.

If we assume normal incidence of light, r = 0 and $\cos r = 1$ and the above equation reduces to

$$\Delta = 2\,\mu_f\, t$$

For the two reflected wave to interfere destructively the condition for destructive interference is

$$\Delta = (2m+1)\frac{\lambda}{2}$$

Therefore $$2\,\mu_f\, t = (2m+1)\frac{\lambda}{2}$$

For minimum thickness of the coating film $m = 0$

Therefore $$2\,\mu_f\, t = \frac{\lambda}{2}$$

Or $$t_{min} = \frac{\lambda}{4\,\mu_f}$$

Thus the optical thickness of AR coating should be of one-quarter wavelength